MOTHERSHIP

SHIP NAME

TYPE CLASS

1. SELECT PRIMARY MODULES *REQUIRED MODULES

LIFE SUPPORT* Life support keeps the human crew alive. Each point of life support can support up to 10 humans. For every point below the required minimum, anyone not wearing a vaccsuit must make a Body save every hour or take 1d10 damage. This includes those in cryochambers as well, but does not include androids. Many ships include 2-3 times the required amount of life support in case of extra passengers or damage to the system.

COMMAND* The command module is the cockpit, command center, or bridge of a ship. For every 4 officer positions, one command module is required. Officers can be captains, first mates, navigation officers, communications officers, and is largely up to the Warden and the players to decide.

ARMOR* Armor plating protects the ship from small metoerites, space dust and debris, as well as, if need be, attacks from other vessels. Every point of armor costs 3 hull, and grants the ship +10% Armor save (Max 80).

2. SELECT SECONDARY MODULES

JUMP DRIVES Jump drives enable the ship to travel through hyperspace. Every point of Jump Drive increases the ship's jump capability by 1 (Max 9). The first drive costs 1 hull, the second costs 2, the third costs 3, etc.

COMPUTER The ship's computer is a powerful artificial intelligence that helps with astrogation, combat, and a number of other autonomous tasks. A ship's Intellect is equal to the number of computer modules x10 +30%. It's Combat is equal to the number of computer modules x10 +10%. A computer module is required for each jump drive. Additionally, each computer module equipped allows the computer to take more actions during combat.

GALLEY Galleys contain a kitchen, restrooms, and a common area on a ship. Any ships making trips longer than 1 day must have 1 galley for every 2 life support modules or else the crew must take Body saves once/day. Failure means 2d10 damage and1d10 Stress. Galleys must be re-stocked once a month and extra stores take up 1 Cargo.

WEAPON MOUNT For every weapon your ship has you must have 1 mount for it. You can find the list of ship weapons in the Player's Survival Guide on page 25.

MEDICAL BAY Medical bays allow scientists, doctors, and other researchers to heal crew members and perform various procedures (biopsies, autopsies, surgery). Each connected medbay on the ship grants +5% to the Intellect of the Scientists or Androids using them. Medical bays also grant advantage on Body saves made for healing.

CRYOCHAMBER Cryochambers allow humans to sleep during long trips, particularly through hyperspace. Androids do not require them. Each point of hull spent on cryochambers accomodates up to 4 cryosleep pods. Individuals who don't go into cryosleep during hyperspace jumps often have strange and terrifying experiences.

LIVING QUARTERS Generally, if a ship is to travel through normal space for at least a week, then living quarters or "staterooms" are provided for each of the ship's officers, or other important crew members.

BARRACKS The same as living quarters, except they are non-private and house up to twelve crew members. Like living quarters, they are not-essential rooms, but ships that need them, but don't have them, give their crew +1 Stress per journey or month of travel.

CARGO HOLD Cargo holds are essentially 20x20m rooms used for storage. Each cargo hold can hold up to 10 cargo units (each cargo is roughly the size of a large pallet). Cargo holds can also be used for any other basic room not provided for on this list (brigs, secret compartments, mining equipment, training facilities, hangars, armories, etc.).

SCIENCE LAB Similar to the medical bay, the science lab allows for detailed research. Each connected science lab grants +5% Intellect to Scientists and Androids using them to conduct research or experiments. Additionally, they can be designated as repair shops and used by Teamsters to repair electronics, machines, or even Androids.

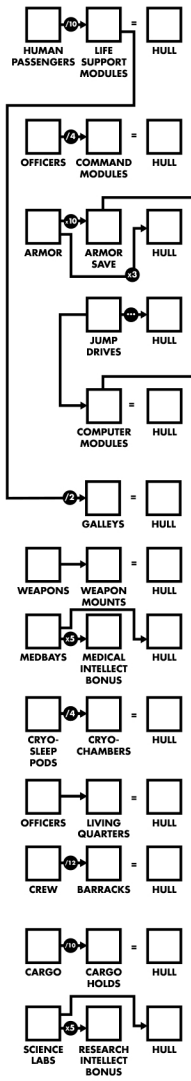

3. CALCULATE BASE HULL BY ADDING UP THE TOTAL HULL FROM THE LIST ABOVE.

4. CALCULATE TOTAL HULL BY ADDING UP THE REQUIRED MODULES BELOW.

THRUSTERS* Without thrusters, the ship cannot move. Every thruster module equipped increases the speed of the ship by +10% (to a maximum of 80). Additionally, thrusters cost an extra 1 hull for every 10 base hull.

ENGINE* Without the engine, the entire ship ceases to operate and becomes a ruin. You must have 1 engine module for every jump drive, plus 1 for every 4 thrusters, plus 1 for every 20 points of base hull.

FUEL* The engine needs fuel to run on. Every jump requires double the fuel of the jump (Jump 2 = 4 fuel) and thrusters burn 1unit of fuel per day. The engine requires at least 3 fuel for every point of engine plus any extra fuel capacity you want to add. More fuel can be stored in Cargo Holds at 1 Fuel per 10 Cargo.

FRAME* Frame covers the miscellaneous parts of a ship, docking gear, airlocks, ventillation, corridors, comms relays, everything else a ship generally uses. Frame is 1 point per 10 points of base hull.

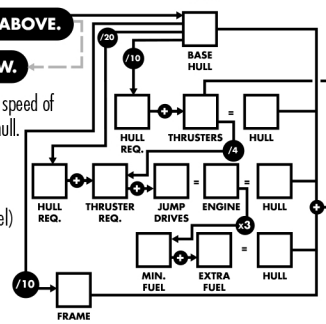

5. FILL IN YOUR SHIP STATS

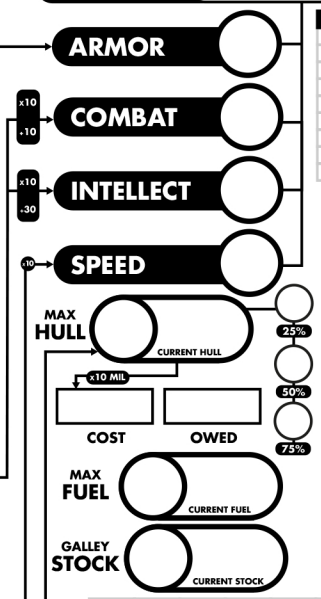

6. LIST YOUR WEAPONS

WEAPON	DAMAGE

7. LIST YOUR OFFICERS

NAME	RANK

8. LIST YOUR CARGO MANIFEST

TOTAL CREW MAX CAP.

9. DRAW YOUR SHIP'S LAYOUT

= 20'

= 1 HULL = 1/2 HULL = 1/2 HULL = 1/2 HULL

Download this character sheet at http://mothershiprpg.com